DWG. SIZE	DWG. NO.
D	031–5293

REVISIONS

SYM.	E.C.N.	DATE	APVD.
A	24469	1/4/00	
	NOW CHARTED DWG		

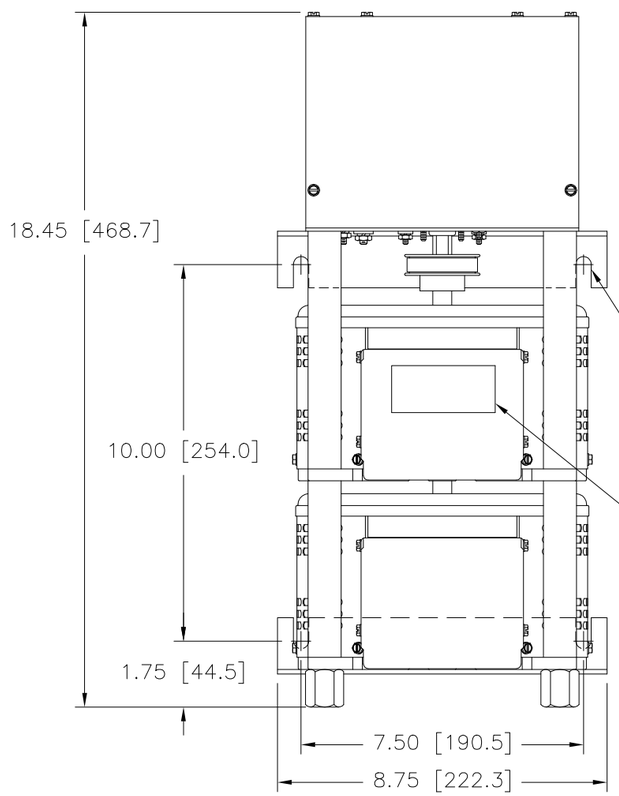

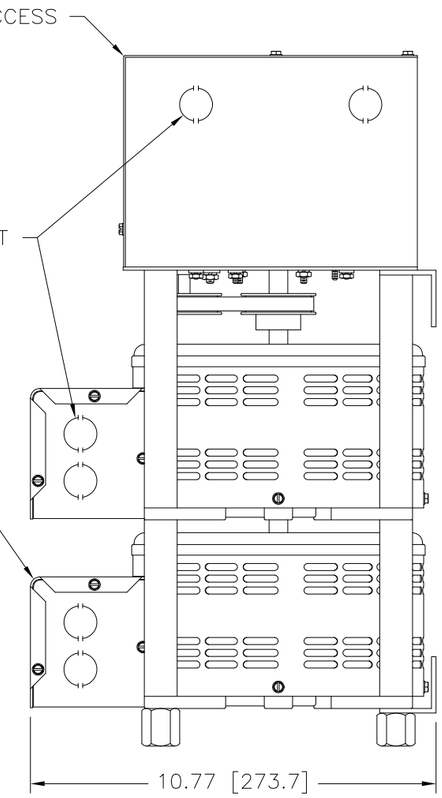

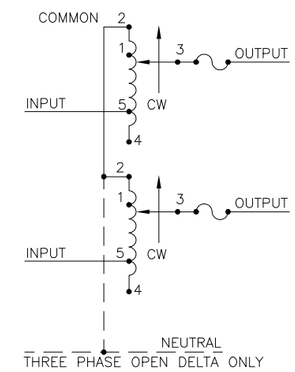

SCHEMATIC
THREE PHASE OPEN DELTA AND SINGLE PHASE SERIES. FUSE RECOMMENDED BUT NOT SUPPLIED

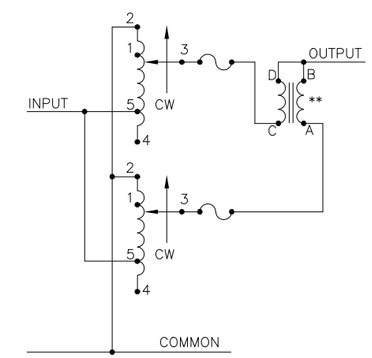

SCHEMATIC
SINGLE PHASE PARALLEL
FUSE RECOMMENDED BUT NOT SUPPLIED

SPEED (SECONDS)	MODEL NUMBER
5	5M2510CT–2
15	15M25120CT–2
30	30M2510CT–2
60	60M2510CT–2

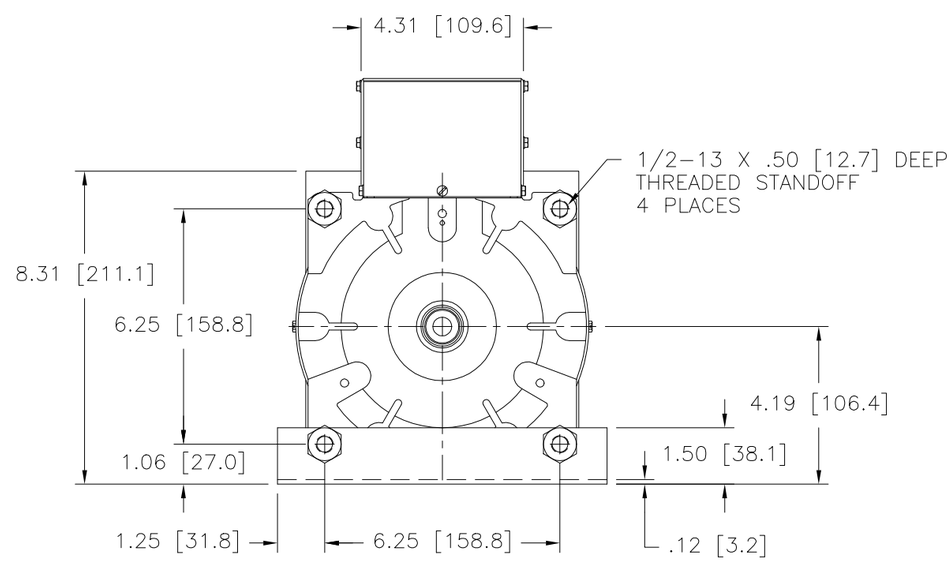

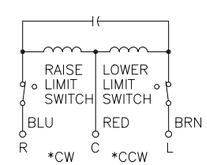

MOTOR CIRCUIT
120V, 50/60 HZ
* ROTATION AS VIEWED FROM MOTOR END
MOTOR SPEED: SEE CHART

++ LINE TO LINE VOLTAGE.

** REQUIRES ONE 51LAC PARALLELING CHOKE (NOT SUPPLIED).

π IF GANGED UNITS ARE USED IN A SYSTEM THAT ORDINARILY HAS A COMMON NEUTRAL OR GROUND BETWEEN SOURCE AND LOAD, THE NEUTRAL OR GROUND MUST BE CONNECTED TO THE COMMON TERMINALS OF THE VARIABLE TRANSFORMER ASSEMBLY. IF THE SYSTEM HAS NO NEUTRAL, THE LOAD MUST BE BALANCED OR THE TRANSFORMER WILL BE DAMAGED.

■ JUMPER PROVIDED IN STANDARD COMMON POSITION AND SHOULD BE MOVED OR REMOVED AS REQUIRED.

+ MOTOR DRIVEN UNITS USE TERMINAL CONNECTIONS FOR CCW INCREASING VOLTAGE, AS VIEWED FROM THE BASE END.

SPECIFICATIONS

WIRING	INPUT VOLTS	INPUT HERTZ	OUTPUT VOLTS	CONSTANT CURRENT LOAD MAX. AMPS	CONSTANT CURRENT LOAD MAX. KVA	CONSTANT IMPEDANCE LOAD MAX. AMPS	CONSTANT IMPEDANCE LOAD MAX. KVA	SHAFT ROTATION TO INCREASE VOLTAGE	TERMINAL CONNECTIONS + MOTOR DRIVEN UNITS USE CCW FOR INCREASING VOLTAGE AS VIEWED FROM BASE END ■ INPUT	JUMPER	OUTPUT
SINGLE PHASE PARALLEL **	120	50/60	0–120	50	6.00	60	7.2	CW	2–2,4–4	———	4–B
								CCW	2–2,4–4	———	2–B
			0–140	50	7.00	——	——	CW	1–1,4–4	———	4–B
								CCW	5–5,2–2	———	2–B
SINGLE PHASE SERIES	240	50/60	0–240	25	6.00	30	7.2	CW	2–2	4–4	3–3
								CCW	4–4	2–2	3–3
			0–280	25	7.00	——	——	CW	1–1	4–4	3–3
								CCW	5–5	2–2	3–3
THREE PHASE OPEN DELTA π	120 ++	50/60	0–120	25	5.20	30	6.20	CW	2–4–2	4–4	3–4–3
								CCW	4–2–4	2–2	3–2–3
			0–140	25	6.06	——	——	CW	1–4–1	4–4	3–4–3
								CCW	5–2–5	2–2	3–2–3

UNLESS OTHERWISE SPECIFIED, TOLERANCE IS ±
DECIMALS .XX .XXX .005 HOLES .06 .01 ANGLES 1° DRAFT 1–1/2°
MATERIAL
UNITS IN [mm]
ALL DIMENSIONS APPLY AFTER PLATING

TITLE: SPEC. CONTROL DRAWING
VARIABLE TRANSFORMER
MODEL: M2510CT–2

STACO ENERGY PRODUCTS CO.
A COMPONENTS CORPORATION OF AMERICA COMPANY
DAYTON, OHIO U.S.A.

The information and design disclosed herein was originated by and is the property of STACO ENERGY PRODUCTS CO., which reserves all patent, proprietary, design, manufacturing, reproduction, use and sale rights thereto, and to any article disclosed therein except to the extent rights are expressly granted to others. The foregoing does not apply to vendor proprietary parts.

DRAWN BY	DATE	FIRST USED ON	DO NOT SCALE DWG.	CUSTOMER APPROVAL	DATE
S.A. SMITH	1/4/2001				
CHECKER	DATE	WEIGHT APPROX. 60 LBS	CODE IDENT. NO. 83008	DWG. SIZE D	DWG. NO. 031–5293
ENGINEER	DATE	SCALE 1/2	SHEET 1 OF 1		