DRAWING MADE IN THIRD ANGLE PROJECTION

DWG NO. 608703

UNIT OF MEASURE	A	B	C	D	E	LENGTH OVERALL	MAX. BUNDLE DIA.	MIN TENSILE STRENGTH
INCHES	.274	.293	.185	.238	.055	14.99	4.0	50 lbs.
MM	6.96	7.44	4.70	6.05	1.40	381.	101.6	22.68 kg.

UNIT OF MEASURE	F	G	H	J	L	W
INCHES	14.700	.500	2.151	.048	2.075	.429
MM	373.38	12.70	54.64	1.22	52.71	10.90

APC ENGINEERING

JUL 13 1990

ISSUED BY Aen

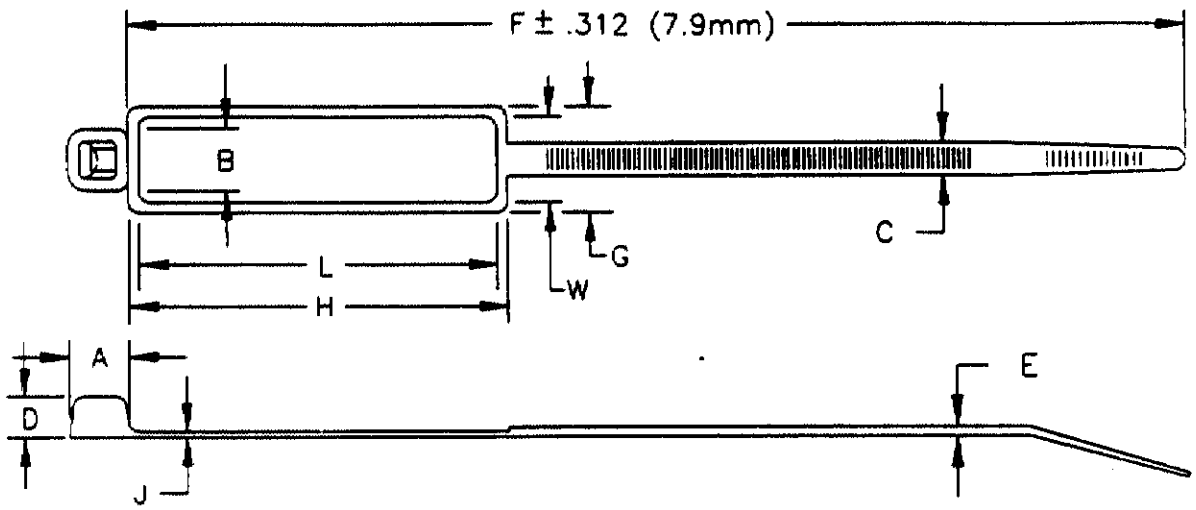

NOTES:

1. MOISTURIZED 1 TO 2.5% WATER.
2. PACKAGED IN HEAT SEALED 3 MIL POLYBAG WITH LABEL PER DWG 404707.
3. MILITARY NO. MS3368-2-A

CUSTOMER DRAWING UNPUBLISHED

QTY REQ'D. PER ASSY.	DWG SIZE	PART No.	DESCRIPTION	ITEM NO
		2-608703-9	NATURAL 1000 ITY4M	
		1-608703-9	NATUARL 100 ITY4C	

REVISION OF EACH ASSY NO. (WHEN BLANK, USE DWG REVISION)

PARTS LIST

LOC D

DIST 1

P	F	LTR	REVISION RECORD	APP	DATE
	✓	0	ECN 062890	[illegible]	7/90

MATERIAL: NYLON 6/6

HEAT TREAT:

FINISH:

DIMENSIONS ARE IN INCHES

TOLERANCES UNLESS OTHERWISE SPECIFIED:
2 PL DEC ±
3 PL DEC ± .039
4 PL DEC ±
ANGLES ±
SURF TEXTURE: √
REMOVE BURRS, BREAK SHARP EDGES, .015 R. MAX.

DRAWN BY: AD-TEK/VL DATE: 7/3/90

APPROVED BY:

CHECK BY: B J M 7/90

RELEASE:

AMP | AMP INCORPORATED Harrisburg, Pa.

NAME: IDENTIFICATION CABLE TIE 15 INCH

SCALE: A

DRAWING No.: 608703

SHEET 1 OF 1

REV. 0

THIS INFORMATION IS CONFIDENTIAL AND IS DISCLOSED TO YOU ON CONDITION THAT NO FURTHER DISCLOSURE IS MADE BY YOU TO OTHER THAN AMP PERSONNEL WITHOUT WRITTEN AUTHORIZATION FROM AMP INCORPORATED. HARRISBURG, PA.